>> Handle-operated Turnbuckle.
Technical data.

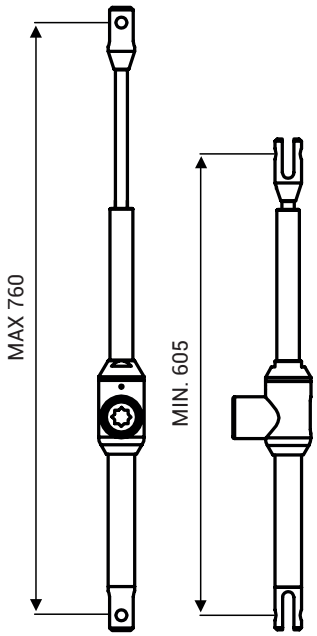

CODE 212.700

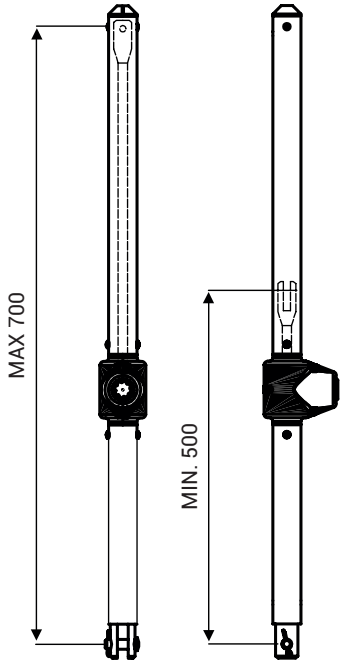

CODE 212.715

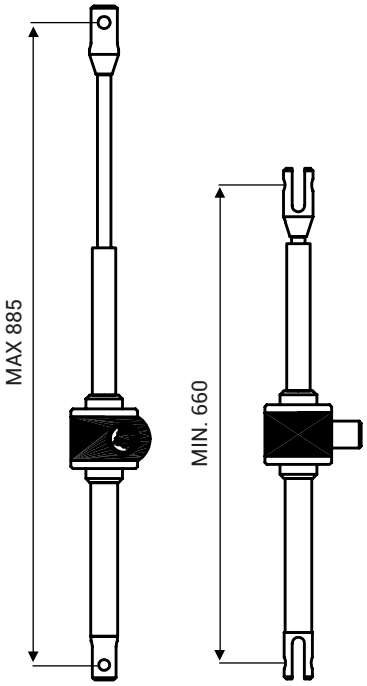

CODE 212.710

HANDLE-OPERATED TURNBUCKLE

HAND-OPERATED TURNBUCKLE CODE	BREAKING LOAD	WORKING LOAD	STUD Ø	CLEVIS WIDTH	WIRE Ø
	kg	kg	mm	mm	mm
212.700	7400	3800	14	15	8
212.715	7400	3800	14	15	8
212.710	10400	7600	16	17	10

NEMO INDUSTRIE S.p.A.

via P. Togliatti, 1555
47025 Cella di Mercato Saraceno FC - Italy

ph: +39 0547 96567
fax: +39 0547 96526

nemo@nemoindustrie.com
www.nemoindustrie.com